捷 流

VALUE

## Value Valves

# VF-8 A Series

## High Performance Triple-Offset Butterfly Valves

www.tuv.com TÜV ID: 9105016044

# VALUE VALVES

VALUE VALVES

## VF-87_A Series
## Triple Offset Butterfly Valve

### A Type Design

VF-8 Series Triple Offset Butterfly Valve
Pressure Rating :ANSI Class 150/300/600/900 LB
Standard Dimension: 4"~48" (100mm~1200mm) ;
Max 136"(3400mm)
Temp.: Laminated Seat to -103 °F ~1022 °F (-75℃ ~550 ℃ ),
Solid metal Seat to -321 °F ~1400 °F (-196℃ ~760 ℃ )
Applications :
Petrochemicals Industry I Fossil & Cogeneration Power I Steel Mill I Refinery I LNG & Cryogenic I Pulp & Paper I Nuclear Power

VF-870A

## Product Characteristce

- Value Valves is the only company in Taiwan and one of the small number companies in Asia that could supply triple-offset valves with zero leakage and fire safe approved per ISO10497 / API 607.
- With 35 years of experience in the industry, extensive reference lists in all industrial sectors and continued improvement with high quality product, Value Valves is a company to be trusted – now, tomorrow and for a long way into the future.
- Suitable for shut-off and regulating processes in applications with ultra-low and high temperatures, high pressures, fire, corrosion and other harsh conditions in industries such as petroleum, natural gas, chemical, refining, energy and electricity.
- Body strength according to API 609、API 598 and ASME B16.34.
- With the expectation from customers, new technical improved Triple Offset Butterfly Valve is now introduced to the market.
- The full series passed the fire test to ISO 10497/ API 607 and verified by TUV.
- Life cycles up to 50,000 cycles without jamming or packing adjustment.
- All mounting dimensions are in accordance with ISO 5211.

## SPECIAL OFFER

Heating jacket and nozzles that apply to temperature changes and prevent fluids from crystallization are available on demand. Value Valves VF-8 series, triple- offset butterfly valve can be provided on customer's requirements. More detail please consult with us at sales@valuevalves.com.tw

## CERTIFICATE

TÜV Rheinland
- PED(H)
  (Pressure equipment directive 97/23/EC: module H)
- ATEX 94/9/EC (Atmosphere Explosible)
- Fire type-testing requirement ISO 10497
- Emission Test ISO 15848-1
- Cryogenically test BS 6364
- SIL3(Safety integrity level 3) IEC 61508-1

MIRDC-Metals Industry Research and Development Center
- Valve Fire test ISO 10497, API 607
- Emission Test ISO 15848-1
- Emission Test ANSI/ISA 93.00.01

CU TR Certificate (Customs Union Technical Regulations)
- TR CU 032 Certificate - Gas / Liquid
- TR CU 010 Certificate - Gas / Liquid

TSG(Special Equipment Type Test Certificate) TSG D7002-2006

## APPLICATIONS

Petrochemicals Industry
Fossil & Cogeneration Power
Steel Mill
Refinery
LNG & Cryogenic
Pulp & Paper
Nuclear Power

# VALUE VALVES

## STRUCTURAL ANALYSIS

For flanged end valve, the shaft is positioned at the flange side which reduced the possibility of external leakage caused by the ambient temperature changed.

### DISC HARD FACE

The standard disc is built with a Stellite#6(24" and below) / Stellite #21(24" up) hard face provides increased hardness and wear resistance with long service life.

We provides
& laminated seal seat -103~1022 °F (-75~550 °C )
solid metal seal seat -321~1400 °F (-196~760 °C ) as well.

### SEALING DESIGN

The soft sealing of graphite for laminated seat is placed on the body which reducing the possibility of graphite gets wear further leads to leakage. The graphite is positioned in the notch of the sealing seat in order to allow for easy repair.

### DUST PROOF DESIGN

A set of bushing design prevents the ingress of foreign material into the shaft area.

### BLOW-OUT PROTECTION

Both the shaft stop and bottom cover offers reliable blowout protection.

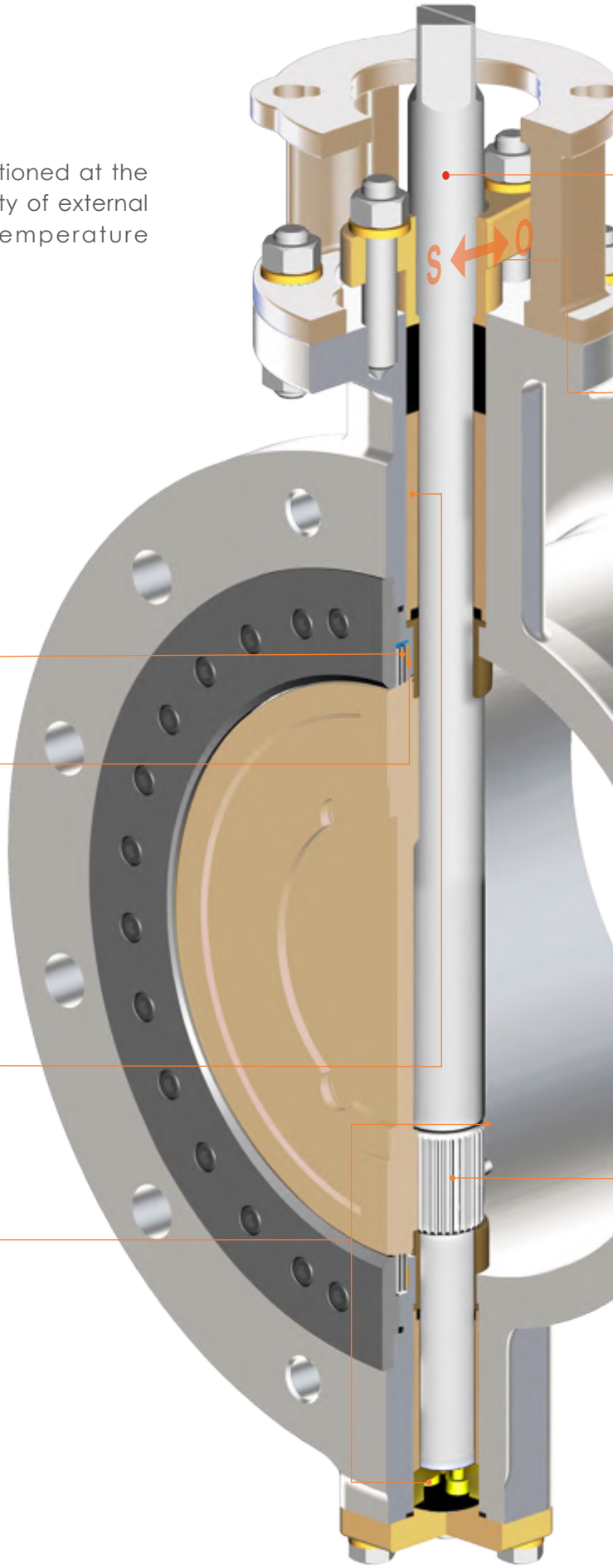

## STRUCTURAL ANALYSIS

### DISC INDICATION

Disc indication marked at the shaft end to clearly identify the disc opening degree at any time.

### BI-DIRECTIONAL DHUTOFF DESIGN

The floating sealing design is self-adjustable and the sealing surfaces of an elliptical sealing system are completely in contact at the final position only. This mechanism provides flawless bubble tight shutoff.

### DISC

Pin-less design provides easily maintenance work.

design

## APPLICABLE STANDARDS

End Connection: Wafer , Lugged , Flanged
Shell Thickness: ASME B16.34, EN 12516
Mounting Flange: ISO 5211
Design & Pressure Rating: ASME B16.34
Face to Face: API 609, ISO 5752
Pressure Test: ISO 5208, API 598
Fire Safe Approval: API 607, ISO 10497
Fugitive Emission Approval:
ANSI/ISA-SP-93, TA-Luft, ISO15848-1/-2
Cryogenic: BS 6364
Marking: MSS-SP-25
EX Certificate: ATEX
Safety Integrity Level 3 (SIL3): IEC-61508-1
Leakage Class:
ANSI FCI 70-2-2006 TABLE 1, ISO 5208 RATE D/A
Flange Connections: ASME B16.5 Class 150/300/600/900
B16.47 Class 150/300/600/900
(Other flange connections are available upon demand)

Information provided is not contractual, data may be changed without notice. All rights reserved by Value Valves Co., Ltd.

# VF-87 Series

ANSI CLASS 150/300/600LB I ISO PN 10~PN 50 I JIS 10K 16K 20K 30K 40K

## PARTS AND MATERIALS

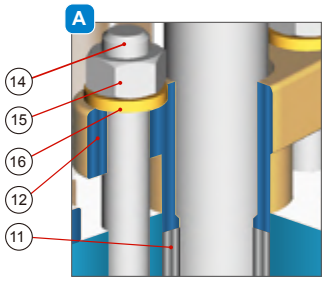


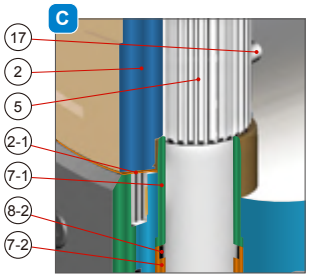


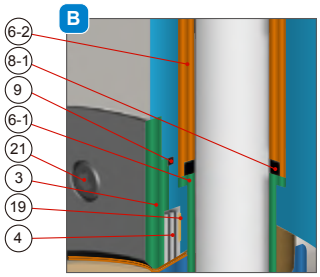


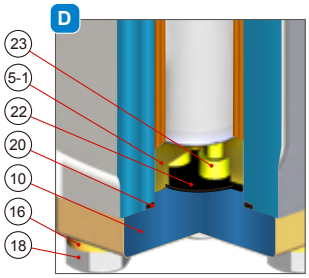


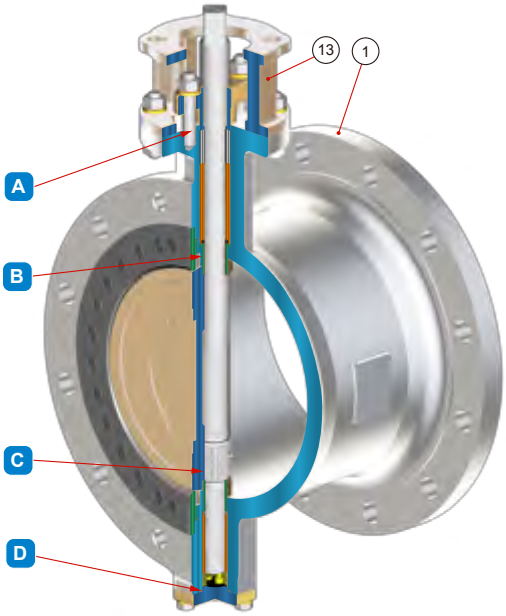


METARILS

| No. | Name | Materials | Remark |
|---|---|---|---|
| 1 | BODY | A216 Gr. WCB | |
| | | A351 Gr. CF8 | |
| | | A351 Gr. CF8M | |
| 2 | DISC | A216 Gr. WCB | |
| | | A351 Gr. CF8 | |
| | | A351 Gr. CF8M | |
| 2-1 | DISC SEAT | STELLITE #6 WELD OVERLAY | |
| 3 | RETAINER | A351 Gr. CF8 | |
| | | A351 Gr. CF8M | |
| 4 | MATEL SEAT | A240 Gr. 304 | * |
| | | A240 Gr. 316 | |
| | | UNS S32205 | |
| | | A479 XM-19 | |
| | LAMINATED SEAT | A240 Gr. 304+GRAPHITE | |
| | | A240 Gr. 316+GRAPHITE | |
| | | UNS S32205+GRAPHITE | |
| | | A479 XM-19+GRAPHITE | |
| 5 | SHAFT | A182 Gr. F6a | |
| | | A479 XM-19 | |
| | | UNS S32205 | |
| 5-1 | SHAFT STOP | A182 Gr. F6a | |
| | | A479 XM-19 | |
| | | UNS S32205 | |
| 6-1 | BUSHING | STAINLESS STEEL +(RTFE+316SS) | |
| 6-2 | | | |

| No. | Name | Materials | Remark |
|---|---|---|---|
| 7-1 | BUSHING | STAINLESS STEEL +(RTFE+316SS) | |
| 7-2 | | | |
| 8-1 | SEAL-1 | GRAPHITE | |
| 8-2 | SEAL-2 | GRAPHITE | |
| 9 | SEAL-3 | GRAPHITE | |
| 10 | BOTTOM COVER | A216 Gr. WCB | |
| | | A351 Gr. CF8M | |
| | | A351 Gr. CF8 | |
| 11 | GLAND PACKING | GRAPHITE | * |
| 12 | GLAND | A351 Gr. CF8 | |
| | | A351 Gr. CF8M | |
| 13 | YOKE | A536 65-45-12 | *(1) |
| | | A216 Gr. WCB | |
| 14 | STUD | A193 Gr. B8 | |
| 15 | NUT | A194 Gr. 8 | |
| 16 | SPRING WASHER | A240 Gr. 304 | |
| 17 | STUD | A193 Gr. B8M | |
| 18 | BOLT | A193 Gr. B8 | |
| 19 | GASKET | GRAPHITE | * |
| 20 | BOTTOM COVER GASKET | GRAPHITE | * |
| 21 | SOCKET HEAD CAP BOLT | A193 Gr. B8 | |
| 22 | LOCK PLATE | RTFE+316SS | * |
| 23 | SOCKET HEAD CAP BOLT | A193 Gr. B8 | |

Remark: 1.YOKE(13)Materials A216 Gr. WCB is only available for F16 and below ;
A536 65-45-12 for F25 and above.
2.*Each materials can provide on different process of customer's requirements.

WAFER TYPE LUG TYPE

DN 100~600
INCH 4~24

# VF-870/873

ANSI CLASS 150LB I ISO PN 10~PN 25 I JIS 10K 16K 20K

## DIMENSIONS

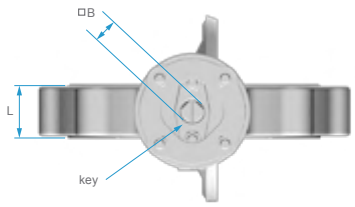


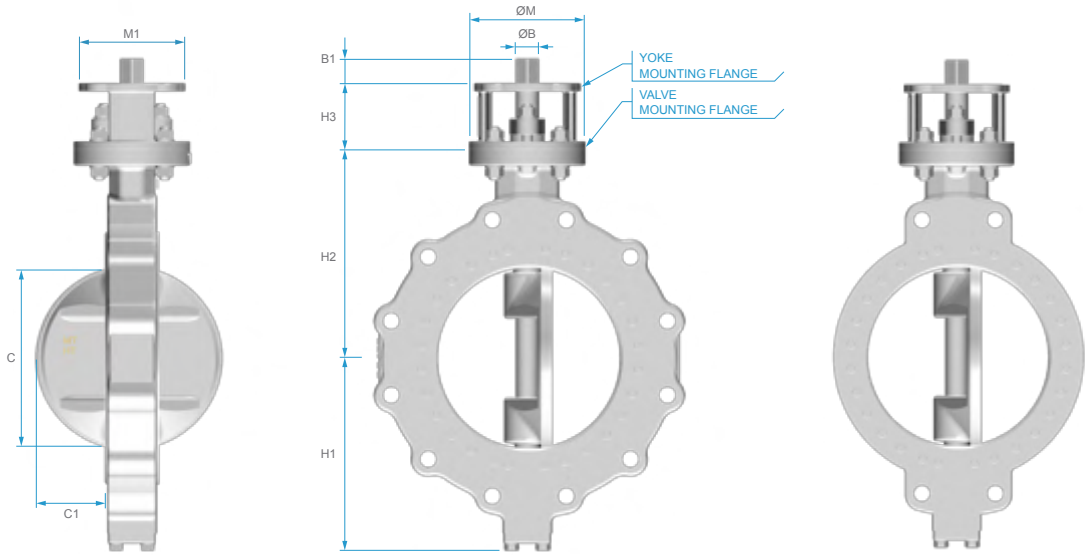


**Unit : mm**

| Size | | Face to Face | Dimensions | | | | | Mounting flange (ISO 5211) | | | | Shaft end | | | | Weight (KG) | |
|---|---|---|---|---|---|---|---|---|---|---|---|---|---|---|---|---|---|
| | | | | | | | | VALVE | | Yoke | | | | | | | |
| mm | Inch | L | H1 | H2 | H3 | C | C1 | Type | ØM | Type | M1 | φB | B1 | Key | □B | VF-870 Wafer type | VF-873 Lug type |
| 100 | 4 | 54 | 162 | 165 | 70 | 78 | 22 | F10 | 125 | F10/F07 | 102 | 18 | 23 | - | 14 | 12 | 14 |
| 150 | 6 | 57 | 197 | 215 | 70 | 130 | 45 | F10 | 125 | F10/F07 | 102 | 22 | 23 | - | 17 | 19 | 21 |
| 200 | 8 | 64 | 211 | 230 | 80 | 174 | 65 | F12 | 150 | F12/F10 | 125 | 28 | 28 | - | 22 | 31 | 36 |
| 250 | 10 | 71 | 252 | 275 | 80 | 220 | 85 | F12 | 150 | F12/F10 | 125 | 28 | 28 | - | 22 | 42 | 55 |
| 300 | 12 | 81 | 291 | 315 | 100 | 268 | 104 | F14 | 175 | F14/F12 | 140 | 35 | 37 | - | 27 | 62 | 86 |
| 350 | 14 | 92 | 329 | 355 | 100 | 305 | 121 | F14 | 175 | F14/F12 | 140 | 34.85 | 55 | 10*8 | - | 80 | - |
| 400 | 16 | 102 | 359 | 390 | 120 | 353 | 141 | F16 | 210 | F16/F14 | 165 | 49.7 | 65 | 16*10 | - | 112 | - |
| 450 | 18 | 114 | 384 | 415 | 120 | 398 | 159 | F16 | 210 | F16/F14 | 165 | 49.7 | 65 | 16*10 | - | 142 | - |
| 500 | 20 | 127 | 414 | 455 | 120 | 445 | 177 | F16 | 210 | F16/F14 | 165 | 59.7 | 80 | 18*12 | - | 195 | - |
| 600 | 24 | 154 | 479 | 540 | 150 | 540 | 214 | F25 | 300 | F25 | 300 | 59.7 | 80 | 18*12 | - | 296 | - |

* Other dimensions please consult with Value Valves. *Inside Pipe Diameter > C

DIMENSION

## CV FLOW COFFICIENT

Including 30% Safety Factor

| Operating Differential Pressure | | | | | | | | |
|---|---|---|---|---|---|---|---|---|
| Size | | Flow Direction | 6.25 bar | | 12.5 bar | | 25 bar | |
| | | | End to Close | Start to Open | End to Close | Start to Open | End to Close | Start to Open |
| (mm) | (Inch) | direction | (Nm) | (Nm) | (Nm) | (Nm) | (Nm) | (Nm) |
| 100 | 4 | Shaft Side | 108 | 108 | 108 | 108 | 108 | 132 |
| 100 | 4 | Bidirectional | 108 | 129 | 108 | 129 | 149 | 179 |
| 150 | 6 | Shaft Side | 187 | 187 | 187 | 187 | 187 | 236 |
| 150 | 6 | Bidirectional | 187 | 224 | 187 | 224 | 285 | 343 |
| 200 | 8 | Shaft Side | 205 | 205 | 205 | 205 | 205 | 338 |
| 200 | 8 | Bidirectional | 205 | 246 | 205 | 246 | 380 | 456 |
| 250 | 10 | Shaft Side | 380 | 380 | 380 | 380 | 380 | 600 |
| 250 | 10 | Bidirectional | 380 | 456 | 380 | 456 | 691 | 829 |
| 300 | 12 | Shaft Side | 541 | 541 | 541 | 541 | 541 | 898 |
| 300 | 12 | Bidirectional | 541 | 649 | 541 | 649 | 1030 | 1237 |
| 350 | 14 | Shaft Side | 654 | 654 | 654 | 666 | 654 | 1223 |
| 350 | 14 | Bidirectional | 654 | 785 | 688 | 826 | 1375 | 1650 |
| 400 | 16 | Shaft Side | 862 | 862 | 862 | 909 | 862 | 1679 |
| 400 | 16 | Bidirectional | 862 | 1034 | 943 | 1132 | 1886 | 2263 |
| 450 | 18 | Shaft Side | 1097 | 1097 | 1097 | 1198 | 1097 | 2226 |
| 450 | 18 | Bidirectional | 1097 | 1316 | 1247 | 1497 | 2495 | 2994 |
| 500 | 20 | Shaft Side | 1192 | 1192 | 1192 | 1396 | 1192 | 2622 |
| 500 | 20 | Bidirectional | 1192 | 1430 | 1464 | 1757 | 2927 | 3513 |
| 600 | 24 | Shaft Side | 1730 | 1730 | 1730 | 2305 | 1730 | 4365 |
| 600 | 24 | Bidirectional | 1730 | 2075 | 2406 | 2886 | 4811 | 5774 |

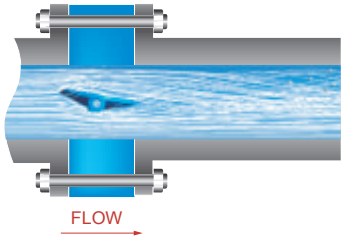


## TORQUE CHART (Nm)

| Size | | 150LB : VF-87_ CV Flow Coefficient | | | | | | | | | |
|---|---|---|---|---|---|---|---|---|---|---|---|
| | | Percent of Rated Travel | | | | | | | | | |
| mm | inch | 10% | 20% | 30% | 40% | 50% | 60% | 70% | 80% | 90% | 100% |
| 100 | 4 | 17 | 38 | 67 | 107 | 148 | 194 | 251 | 300 | 319 | 296 |
| 150 | 6 | 33 | 78 | 146 | 231 | 336 | 461 | 625 | 795 | 919 | 893 |
| 200 | 8 | 50 | 138 | 254 | 377 | 552 | 770 | 1021 | 1294 | 1475 | 1525 |
| 250 | 10 | 92 | 230 | 410 | 620 | 896 | 1253 | 1677 | 2155 | 2536 | 2687 |
| 300 | 12 | 132 | 362 | 642 | 958 | 1377 | 1864 | 2473 | 3092 | 3671 | 3810 |
| 350 | 14 | 118 | 279 | 608 | 1036 | 1673 | 2575 | 3730 | 5015 | 6564 | 6843 |
| 400 | 16 | 348 | 454 | 856 | 1458 | 2320 | 3488 | 5082 | 6915 | 8584 | 9280 |
| 450 | 18 | 463 | 735 | 1336 | 2212 | 3345 | 4765 | 6274 | 7963 | 9688 | 11170 |
| 500 | 20 | 490 | 975 | 1645 | 2576 | 3944 | 5603 | 7837 | 10396 | 12825 | 13386 |
| 600 | 24 | 640 | 1395 | 2250 | 3636 | 5587 | 8333 | 11611 | 14717 | 18754 | 21216 |

*Other dimensions please consult with Value Valves.

# General Ordering Information

| VF | - | TYPE | PRESSURE RATING | END CONNECTION | SPECIAL OFFER | - | TYPE A | - | SIZE | - | BODY | DISC | SHAFT | - | BODY SEAT | - | DISC SEAT | - | FLANGE DRILLING | - | OPERATOR |
|---|---|---|---|---|---|---|---|---|---|---|---|---|---|---|---|---|---|---|---|---|---|
| | | 8 | X | X | X | - | A | - | X | - | X | X | X | - | X | - | X | - | X | - | X |

| PRESSURE RATING | |
|---|---|
| 7 | ANSI CLASS 150LB |
| 8 | ANSI CLASS 300LB |
| 9 | ANSI CLASS 600LB |
| 0 | OTHERS |

| END CONNECTION | |
|---|---|
| 0 | WAFER |
| 3 | LUG |
| 6 | FLANGE (SHORT) |
| 7 | FLANGE (LONG) |
| 8 | FLANGE (GATE) |

| SPECIAL OFFER | |
|---|---|
| H | HIGH TEMP. (350°C~760°C) (662 ℉ ~1400 ℉ ) |
| L | CRYOGENIC (-40°C~-196°C) (-40 ℉ ~-320 ℉ ) |
| J | JACKET |
| E | EMISSION |
| 0 | OTHERS |

| SIZE | mm |
|---|---|
| 04 | 100 |
| 06 | 150 |
| 08 | 200 |
| 10 | 250 |
| 12 | 300 |
| 14 | 350 |
| 16 | 400 |
| 18 | 450 |
| 20 | 500 |
| 24 | 600 |
| 26 | 650 |
| 28 | 700 |
| 30 | 750 |
| 32 | 800 |
| 34 | 850 |
| 36 | 900 |
| 38 | 950 |
| 40 | 1000 |
| 42 | 1050 |
| 44 | 1100 |
| 46 | 1150 |
| 48 | 1200 |

| BODY | | DISC | | SHAFT | |
|---|---|---|---|---|---|
| WB | WCB | WB | WCB | XM | XM-19 |
| 13 | CF8 | 13 | CF8 | D2 | SS 32205 |
| 14 | CF8M | 14 | CF8M | 63 | SS 630 |
| 0 | OTHER | 0 | OTHER | 0 | OTHER |

| OTHER MATERIALS | | | | | |
|---|---|---|---|---|---|
| BODY | | DISC | | SHAFT | |
| LB | LCB | LB | LCB | IN | INCONEL |
| 42 | WC6 | 42 | WC6 | MO | MONEL |
| 3L | CF3 | 3L | CF3 | HA | HASTELLOY |
| 6L | CF3M | 6L | CF3M | 20 | ALLOY 20 |
| 8M | CG8M | 8M | CG8M | TI | Ti |
| 7L | CG3M | 7L | CG3M | TT | 316Ti |
| IN | INCONEL | IN | INCONEL | D3 | S32750 |
| MO | MONEL | MO | MONEL | | |
| HA | HASTELLOY | HA | HASTELLOY | | |
| 20 | ALLOY20 | 20 | ALLOY20 | | |
| TI | Ti | TI | Ti | | |
| TT | 316Ti | TT | 316Ti | | |
| 5A | SS CE3MN | 5A | SS CE3MN | | |

| OPERATOR | |
|---|---|
| N | BARE SHAFT |
| G | GEAR BOX |
| P | PNEUMATIC |
| E | ELECTRIC |

| DISC SEAT | |
|---|---|
| ST6 | STELLITE #6 |
| ST2 | STELLITE #21 |

| BODY SEAT | |
|---|---|
| M | MATEL SEAL SEAT |
| L | LAMINATED SEAL SEAT |
| 0 | OTHER OFFER |

| FLANGE DRILLING | | |
|---|---|---|
| A | 150LB | ASME B16.5 150LB |
| B | | ISO 7005-1 PN10 |
| C | | ISO 7005-1 PN16 |
| D | | ISO 7005-1 PN20 |
| E | | ISO 7005-1 PN25 |
| F | | JIS 10K |
| G | | JIS 16K |
| H | | JIS 20K |
| K | | B.S. 10 Table E |
| L | 300LB | ASME B16.5 300LB |
| M | | ISO 7005-1 PN40 |
| N | | ISO 7005-1 PN50 |
| O | | JIS 30K |
| P | | JIS 40K |
| Q | 600LB | ASME B16.5 600LB |
| R | 900LB | ASME B16.5 900LB |

Note: Example
VF-870E-A-08-WB13XM-L-ST6-P-N
Shall be a:
Triple offset butterfly valve(8) - ANSI 150LB(7) - Wafer Type(0) - Emission(E)-TYPE A(A) - DN200(08)
WCB Body(WB) - CF8 Disc(13) - Shaft in XM-19(XM) - Body seat in Laminated Seat(L)
Disc seat in Stellite #6(ST6) - Flange Drilling in JIS 40K (P) - Bare Shaft(N)
* For any other special offers, please contact Value Valves.

www.valuevalves.com

**VALUE VALVES CO., LTD.**

TEL : +886-2-22698000
FAX : +886-2-22686600
E-MAIL : sales@valuevalves.com.tw
ADD : No.2, Chung Shan Rd., Tu-Cheng Industrial District, New Taipei City, Taiwan 236

**VALUE VALVES (SuZhou) LTD.**

TEL : +86-512-66558783
FAX : +86-512-66553063
E-MAIL : sales@valuevalves.com.cn
ADD : No.2, WangShan Road, Economic Development Zone, WangShan, Photoelectricity Industrial Park, Suzhou, Jiang Su, China 215104

MAY. 2016. 1000P