REFER DIMENSIONS	TOLERANCE
0~400	±2
400~800	±3
800 ↑	±4

UNIT: ☐MPa ☐bar ☐PSI ☐ Kg/cm²	
MAX WORKING PRESS	
SHELL TEST	
SEAT TEST	
TEST FLUID	

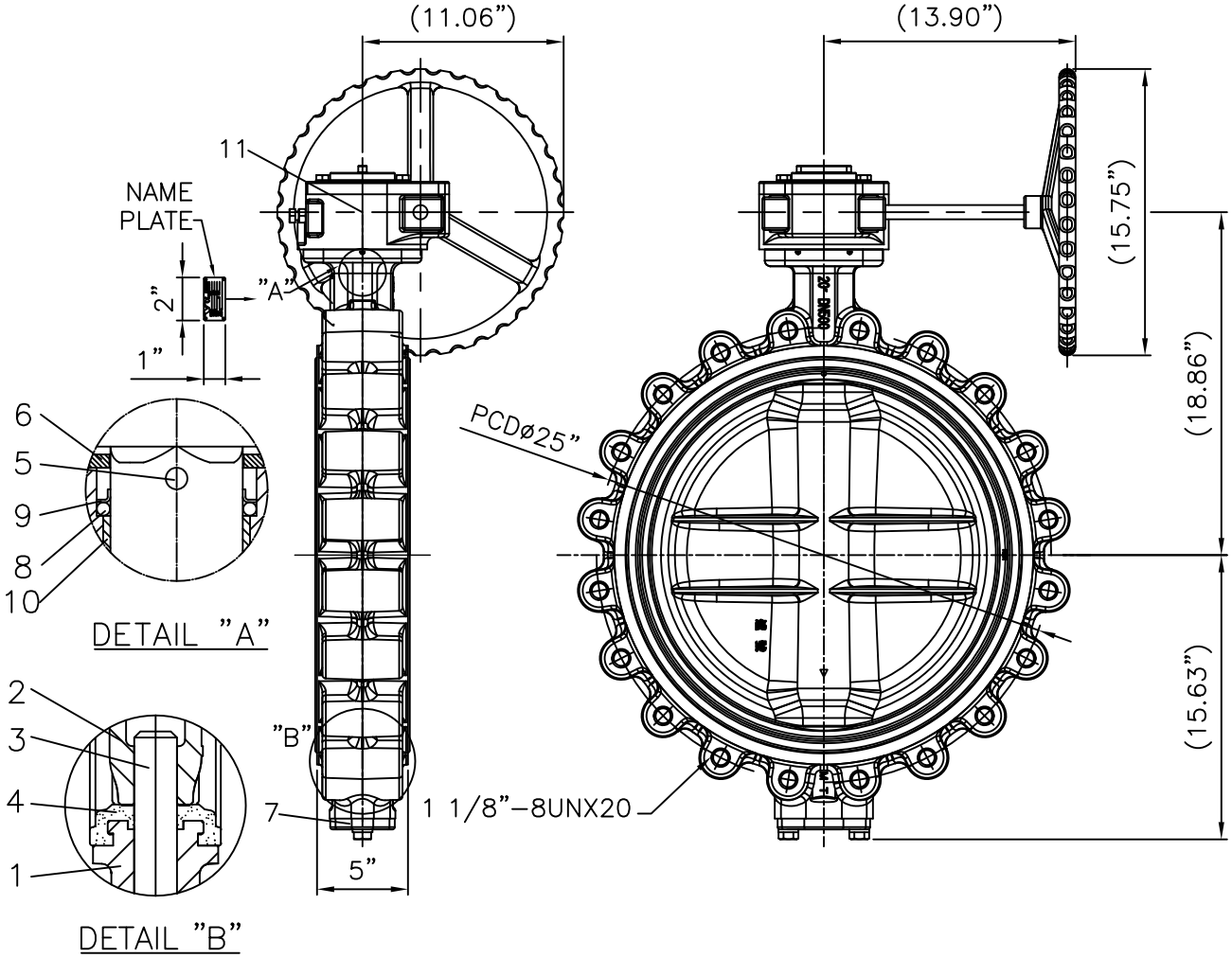

MATERIAL TABLE(ASTM)							
BODY		DISC		STEM		SEAT	
	A536-65-45-12		A536-65-45-12 +NYLON 11		A182 F6A		NBR
					A182 F304		EPT
			A351 CF8		A182 F316		CR
			A351 CF8M				VITON
			B148 C95400				

ITEM NO.	PART NAME	Q'TY	MATERIAL
11	GEAR BOX(C14)	1	ASTM A126-B
10	BUSH	2	RPTFE+A240 304
9	THRUST RING	1	ASTM A240 304
8	O-RING	2	NBR
7	BOTTOM COVER	1	ASTM A126-B
6	UPPER COVER	1	ASTM A126-B
5	PIN	3	ASTM A182 F304
4	SEAT	1	SEE MATERIAL TABLE
3	SETM	2	
2	DISC	1	
1	BODY	1	

VALUE

Value Valves Co., Ltd.
Dba Butterfly Valves & Controls
Grapevine, Texas 76051
www.bvcusa.com

DESN BY	CHK BY	AUTH BY	ISSUE DATE	2014.09.29
POCKY 2014.09.29		LIN 2014.09.29	MATERIAL	
			SCALE	1/9
			UNIT	inch

VF-733 BUTTERFLY VALVE
20" GEAR OPERATED

SIZE A4	DRAWING NO	S733050FG04C	REV	0